SHIMANO

SAHARA

SH-2500R

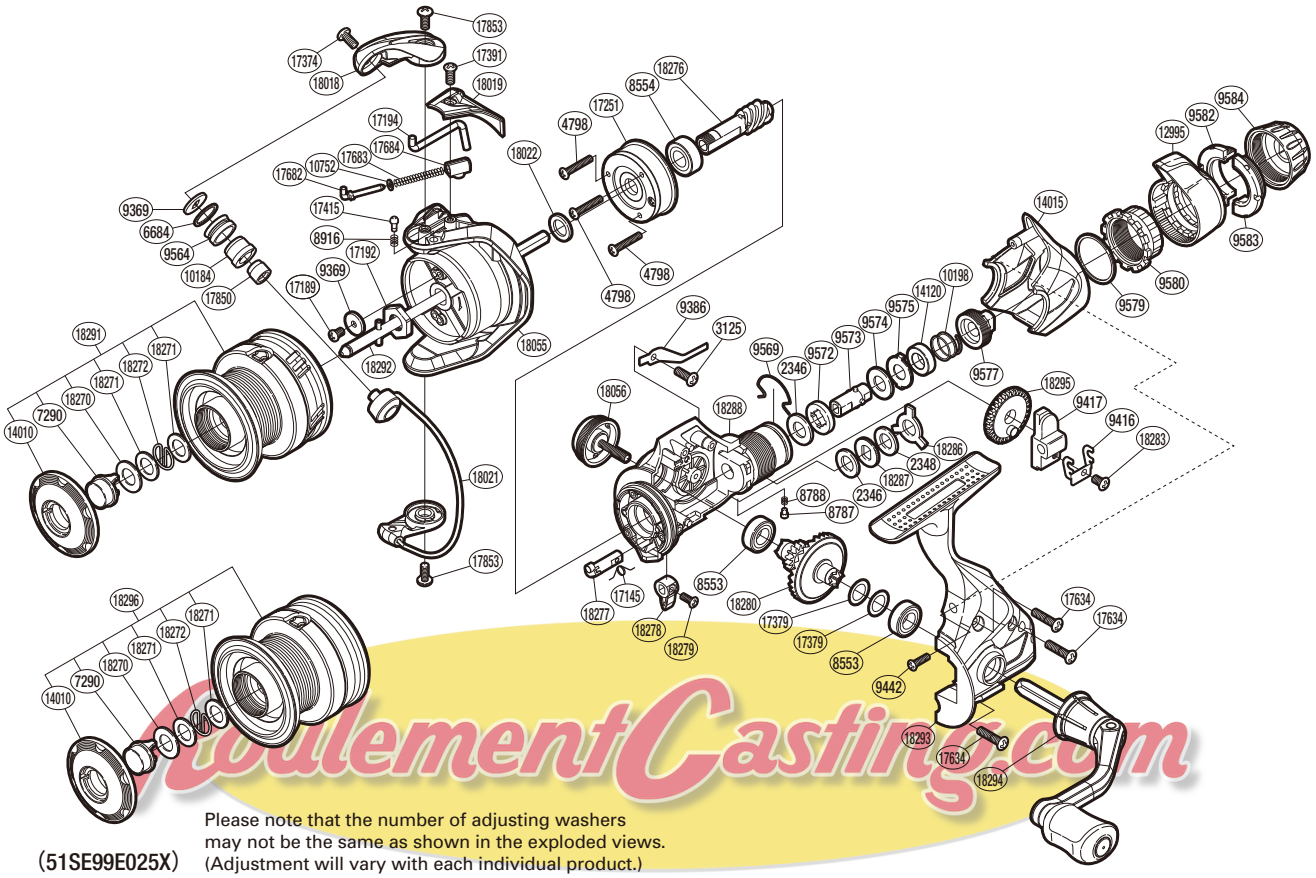

AoulementCasting.com

Please note that the number of adjusting washers may not be the same as shown in the exploded views. (Adjustment will vary with each individual product.)

(51SE99E025X)

Part No.	Description	Part No.	Description	Part No.	Description
RD 2346	Drag Washer	RD 9582	Drag Programmer B1	RD18018	Bail Arm
RD 2348	Drag Washer	RD 9583	Drag Programmer B2	RD18019	Bail Spring Cover
RD 3125	Screw	RD 9584	Drag Programmer A	RD18021	Bail Assembly
RD 4798	Screw	RD10184	Line Roller Bushing	RD18022	Washer
RD 6684	Line Roller Spacer	RD10198	Drag Coil Spring	RD18055	Rotor
RD 7290	Push Button	RD10752	Bail Spring Guide A Support	RD18056	Handle Screw Cap
RD 8553	Ball Bearing	RD12995	Fightin Lever Assembly	RD18270	Washer
RD 8554	Ball Bearing	RD14010	Push Button Collar	RD18271	Washer
RD 8787	Click Pin	RD14015	Rear Protector	RD18272	Locking Spring
RD 8788	Click Spring	RD14120	Drag Collar	RD18276	Pinion Gear
RD 8916	Click Spring	RD17145	Anti-Rreverse Cam Spring	RD18277	Anti-Reverse Cam
RD 9369	Washer	RD17189	Screw	RD18278	Anti-Reverse Lever
RD 9386	Drag Click	RD17192	Rotor Nut	RD18279	Screw
RD 9416	Oscillating Slider Retainer	RD17194	Bail Trip Lever	RD18280	Drive Gear
RD 9417	Oscillating Slider	RD17251	Roller Clutch Assembly	RD18283	Screw
RD 9442	Screw	RD17374	Screw	RD18286	Eared Washer
RD 9564	Line Roller	RD17379	Washer	RD18287	Click Gear
RD 9569	Hold Click Spring	RD17391	Screw	RD18288	Body
RD 9572	Drag Shaft B	RD17415	Click Pin	RD18291	Spool Assembly
RD 9573	Drag Shaft A	RD17634	Screw	RD18292	Main Shaft
RD 9574	Drag Washer	RD17682	Bail Spring Guide A	RD18293	Side Cover
RD 9575	Eared Washer	RD17683	Bail Spring	RD18294	Handle Assembly
RD 9577	Pressure Screw	RD17684	Bail Spring Seat	RD18295	Oscillating Gear
RD 9579	Fightin Pressure Screw Washer	RD17850	Line Roller Collar		
RD 9580	Fightin Pressure Screw	RD17853	Screw	RD18296	Spare Spool Assembly