DAIWA

Please order by parts number, not key number
Veuillez indiquer le numéro de la pièce (Non "Key" No.)

SPINNING REEL BLSLT1000D/2500D/2500D-XH/3000D-C-6000D-C

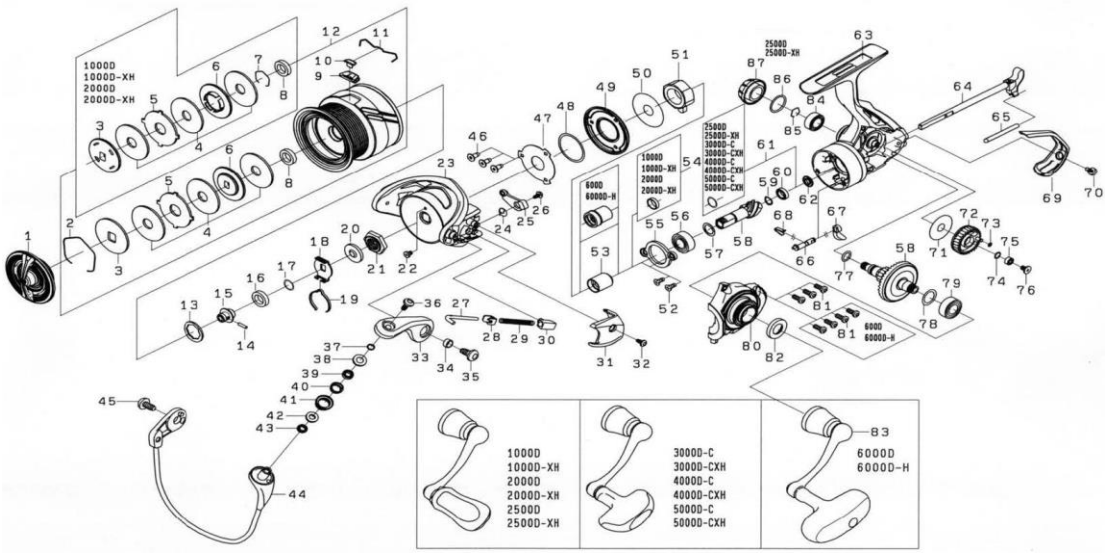

Key No.	BLSLT1000D Part No.	Part Name	BLSLT2500D Part No.	BLSLT2500D-XH Part No.	BLSLT3000D-C Part No.	BLSLT4000D-C Part No.	BLSLT5000D-C PARTS CODE	BLSLT6000D-C PARTS CODE
1	J56-0501	DRAG KNOB	J54-7201	J54-7201	J54-7201	J56-8701	J56-8701	J57-9901
2	J54-7101	DRAG RETAINER	J54-7101	J54-7101	J54-7101	J54-7101	J54-7101	170-4101
3	J56-3801	DRAG DISC WASHER	J54-7001	J54-7001	J54-7001	J54-7001	J54-7001	J57-7501
4	J67-8801	ATD DRAG WASHER (3PCS)	J67-8801	J67-8801	J67-8801	J67-8801	J67-8801	J67-9001
5	J54-6901	DRAG KEY WASHER	J54-6902	J54-6902	J54-6902	J54-6902	J54-6902	J57-7301
6	J56-3701	DRAG DISC WASHER A	J54-9001	J54-9001	J54-9001	J54-9002	J54-9002	J57-7401
7	B35-8701	DRAG COLLAR RING	-	-	-	-	-	-
8	J54-6701	DRAG COLLAR	J54-6701	J54-6701	J54-6701	J54-6701	J54-6701	H62-4801
9	J56-3601	LINE STOPPER PLATE	J55-8101	J55-8101	J55-8101	J56-8601	J56-8601	J56-8601
10	J55-8001	LINE STOPPER	J55-8001	J55-8001	J55-8001	J55-8001	J55-8001	J55-8001
11	J31-4801	LINE STOPPER SPRING	J31-4801	J31-4801	J31-4801	J31-4801	J31-4801	J31-4801
2-12	J66-8201	SPOOL ASSEMBLY	J66-9401	J66-9501	J67-0101	J67-0801	J67-0801	J67-1701
13	J54-6300	SPOOL WASHER	J54-6300	J54-6300	J54-6300	J54-6300	J54-6300	J57-6700
14	J55-8201	SPOOL METAL SCREW	J55-8201	J55-8201	J55-8201	J55-8201	J55-8201	J55-8202
15	J56-4101	SPOOL METAL	J54-9501	J54-9501	J54-9501	J54-9501	J54-9501	J57-6601
16	H62-4801	SPOOL METAL COLLAR	H62-4801	H62-4801	H62-4801	H62-4801	H62-4801	J58-7101
17	J60-2201	CLICK LEAF SPRING HOLDER WASHER	J60-2201	J60-2201	J60-2201	J60-2201	J60-2201	J60-2101
18	J54-6201	CLICK LEAF SPRING HOLDER	J54-6201	J54-6201	J54-6201	J54-6201	J54-6201	J57-6501
19	J52-5101	CLICK LEAF SPRING	J52-5101	J52-5101	J52-5101	J52-5101	J52-5101	J52-5101
20	H98-6901	ROTOR NUT PACKING	H98-6901	H98-6901	H98-6901	H98-6901	H98-6901	H99-5201
21	H96-1101	ROTOR NUT	H96-1101	H96-1101	H96-1101	H96-1101	H96-1101	H99-5101
22	H02-2701	ROTOR NUT SCREW	H02-2701	H02-2701	H02-2701	H02-2701	H02-2701	H02-2701
23	H97-4324	ROTOR	J54-5301	J54-5301	H96-0046	J56-7504	H98-6315	H99-4331
24	H44-3301	BAIL KICK LEVER SPRING	H41-3601	H41-3601	H41-3601	H41-3601	H41-3601	H41-3601
25	H44-3401	BAIL KICK LEVER	J54-5401	J54-5401	J03-8501	J56-7601	J07-2301	H99-4401
26	H41-7701	KICK LEVER SCREW	H41-7701	H41-7701	H41-7701	H41-7701	H41-7701	H41-7701
27	H44-3601	BAIL ARM LEVER SHAFT	J54-5601	J54-5601	H41-4101	H57-2001	H57-2001	H64-0601
28	H57-6101	BAIL ARM LEVER SHAFT PLATE	H57-6101	H57-6101	H57-6101	H57-6101	H57-6101	H57-6101
29	H44-2401	BAIL ARM LEVER SHAFT SPRING	J64-2801	J64-2801	H54-5701	H41-4201	J08-9301	H64-0701
30	H41-4301	BAIL ARM LEVER SHAFT HOLDER	H41-4301	H41-4301	H41-4301	J08-9401	J08-9401	J08-9401
31	H97-4401	BAIL SPRING COVER	J54-5701	J54-5701	H96-0201	J56-7801	H98-6401	H99-4601
32	H43-1301	BAIL SPRING COVER SCREW	H43-1301	H43-1301	H43-1301	H43-1301	H43-1301	H43-1301
33	H96-0701	BAIL ARM LEVER	H96-0107	H96-0107	H96-0107	H96-0107	H96-0107	H96-0107
34	H96-2401	BAIL ARM LEVER COLLAR	H96-2401	H96-2401	H96-2401	H96-2401	H96-2401	H96-2401
35	H43-1201	BAIL ARM LEVER SCREW	H43-1201	H43-1201	H43-1201	H43-1201	H43-1201	H43-1201
36	H69-7701	LINE ROLLER SCREW	H69-7701	H69-7701	H69-7701	H69-7701	H69-7701	H69-7701
37	H96-1001	LINE ROLLER COLLAR (A)	H96-1001	H96-1001	H96-1001	H96-1001	H96-1001	H96-1001
38	H03-8301	LINE ROLLER BEARING PACKING	H03-8301	H03-8301	H03-8301	H03-8301	H03-8301	H03-8301
39	G68-6903	LINE ROLLER BALL BEARING	G68-6903	G68-6903	G68-6903	G68-6903	G68-6903	G68-6903
40	H96-0901	LINE ROLLER BEARING COLLAR	H96-0901	H96-0901	H96-0901	H96-0901	H96-0901	H96-0901
41	G68-6703	LINE ROLLER	G68-6703	G68-6703	G68-6703	G68-6703	G68-6703	G68-6703
42	H96-0801	LINE ROLLER COLLAR (B)	H96-0801	H96-0801	H96-0801	H96-0801	H96-0701	H96-0801
43	H96-0701	LINE ROLLER COLLAR (C*)	H96-0701	H96-0701	H96-0701	H96-0701	H96-0801	H96-0701
44	J56-0101	BAIL ASSEMBLY	J54-5801	J54-5801	J55-9101	J56-7901	J56-9301	J57-6401
45	H43-1201	BAIL HOLDER SCREW	H43-1201	H43-1201	H43-1201	H43-1201	H43-1201	H43-1201
46	J42-9301	MASGEALED PLT SCREW	J42-9301	J42-9301	J42-9301	J42-9301	J42-9301	J42-9301
47	J67-5201	MAGSEALED PLATE	J67-5201	J67-5201	J67-5201	J67-5201	J67-5201	J42-8901
48	J35-4801	MAGSEALED PLATE O-RING	J35-4801	J35-4801	J35-4801	J35-4801	J35-4801	J21-2901
49	J44-5901	MAGSEALED CAP	J44-5901	J44-5901	J38-8501	J40-6701	J40-6701	J42-8801
50	J63-9900	ROLLER CLUTCH WASHER	J63-9900	J63-9900	J63-9900	J63-9900	J63-9900	J43-1601
51	J38-8401	ROLLER CLUTCH	J38-8401	J38-8401	J38-8401	J38-8401	J38-8401	J30-9101
52	G99-7301	PINION BALL BEARING PLT SCREW	G99-7301	G99-7301	G99-7301	G99-7301	G99-7301	G99-7301
53	J53-6101	ROLLER CLUTCH SLEEVE COLLAR	J00-1402	J00-1402	J00-1402	J00-1402	J00-1402	J39-7301
54	J53-6201	ROLLER CLUTCH SLEEVE COLLAR	-	-	-	-	-	-
55	H44-2202	PINION GEAR BALL BEARING PLT	H44-2201	H44-2201	H44-2201	H41-1501	H41-1501	J02-0801
56	G46-7302	BALL BEARING (A)	G46-7302	G46-7302	G46-7302	G53-5104	G53-5104	G52-2802
57	375-8502	PINION GEAR BALL BEARING WASHER (A	375-8502	375-8502	375-8502	375-8502	375-8502	371-2824
58	Z02-3684	PINION + DRIVE GEAR UNIT	Z02-4560	Z02-4561	Z02-4560	Z02-3701	Z02-3701	Z02-3746
59	J68-3001	PINION GEAR BB SPRING WASHER	J68-3001	J68-3001	J68-3001	J68-3001	J68-3001	G57-2501
60	H95-9601	PINION GEAR BALL BEARING (B)	H95-9601	H95-9601	H95-9601	G46-6202	G46-6202	G46-7102
61	-		G46-6103	G46-6103	G46-6103	G46-6103	G46-6103	-
62	J38-7701	PINION GEAR COLLAR	J38-7701	J38-7701	J38-7701	J38-7701	J38-7701	J42-8101
63	J55-9501	BODY	J54-9101	J54-9101	J61-8701	J56-6501	J56-6501	J57-5701
64	J55-9701	MAIN SHAFT	J54-4803	J54-4803	J55-8901	J56-6902	J56-6902	J57-6101
65	J52-6101	OSC POST	J08-4805	J08-4805	J08-4805	J08-4804	J08-4804	J08-4806
66	H59-5501	A/R CAM	H59-5501	H59-5501	H59-5501	H59-5501	H59-5501	J02-0501
67	H59-5401	A/R CAM LEVER	H59-5401	H59-5401	H59-5401	H59-5401	H59-5401	H59-5401
68	H69-7801	A/R CAM SPRING	H69-7801	H69-7801	H69-7801	H69-7801	H69-7801	H69-7801
69	J52-4901	REAR COVER	J38-8901	J38-8901	J38-8901	J40-6801	J40-6801	J42-9401
70	J38-9001	REAR COVER SCREW	J38-9001	J38-9001	J38-9001	J38-9001	J38-9001	J38-9001
71	H60-7902	OSC GEAR WASHER	J64-4701	J64-4701	J64-4701	J64-4701	J64-4701	J49-6901
72	6J5-3580	OSC GEAR	J54-4601	J54-4601	J55-8801	J56-6701	J56-6701	J57-5901
73	G68-3301	OSC GEAR O'RING	H77-601	H77-0601	H77-0601	G46-6001	G46-6001	B85-3101
74	H12-9201	OSC GEAR BB WASHER	H12-9201	H12-9201	H12-9201	H12-9201	H12-9201	G52-2103
75	G46-9005	OSC GEAR BALL BEARING	G46-9005	G46-9005	G46-9005	G46-9005	G46-9005	G46-7105
76	G99-7001	OSC GEAR BB SCREW	G99-7001	G99-7001	G99-7001	G99-7001	G99-7001	H46-3401
77	G67-0501	DRIVE GEARO O'RING	G67-0501	G67-0501	G67-0501	G67-0501	G67-0501	G64-5301
78	375-8502	DRIVE GEAR WASHER	375-8502	375-8500	375-8502	375-8502	375-8502	375-7808
79	G46-7302	DRIVE GEAR BALL BEARING (A)	G46-7302	G46-7302	G46-7302	G46-7302	G46-7302	G52-3405
80	J56-0001	BODY COVER	J54-9301	J54-9301	J54-9301	J56-7401	J56-7401	J57-6301
81	J38-9801	BODY COVER SCREW	J38-9801	J38-9801	J38-9801	J38-9801	J38-9801	J38-9801
82	J13-0201	HANDLE CAP PACKING	J13-0201	J13-0201	J13-0201	J13-0201	J13-0201	H73-0801
83	J53-6301	HANDLE ASSEMBLY	J43-3901	J38-9201	J55-8301	J40-6901	J40-6901	J57-6801
84	G52-2706	DRIVE GEAR BALL BEAERING (B)	G52-2706	G52-2706	G52-2706	G52-2706	G52-2706	B86-1704
85	G47-2401	DRIVE GEAR BEARING RING	G47-2401	G47-2401	G47-2401	G47-2401	G47-2401	G52-5101
86	G16-2401	HANDLE CAP O'RING	G16-2401	G16-2401	G16-2401	G16-2401	G16-2401	G67-2401
87	J38-9701	HANDLE CAP	J38-9701	J38-9701	J38-9701	J38-9701	J38-9701	J42-9901

KorrmenLeaflet.com